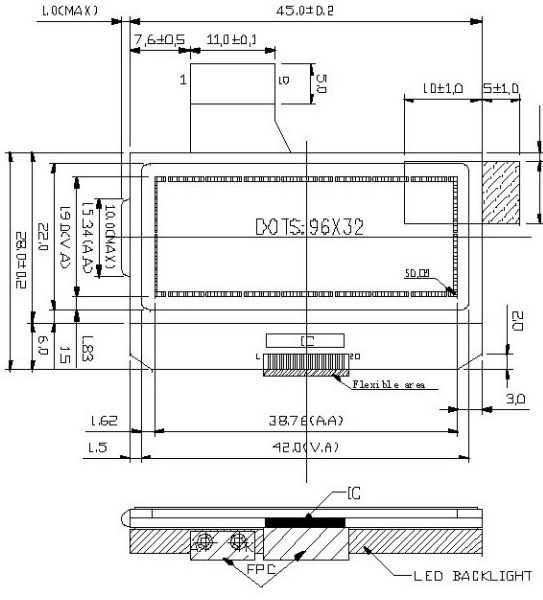

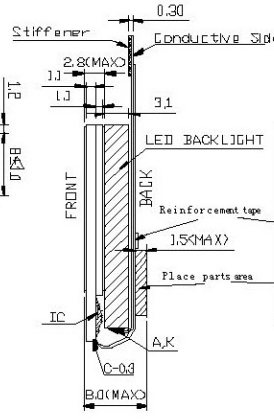

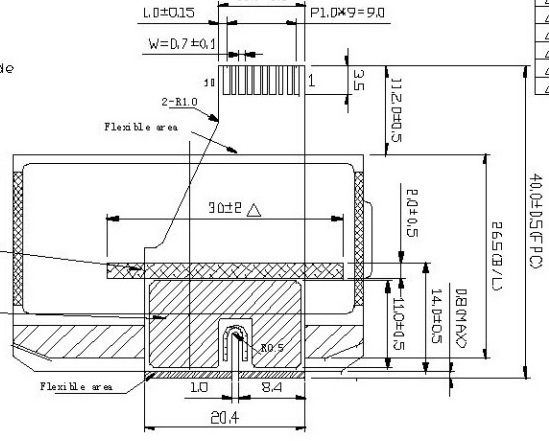

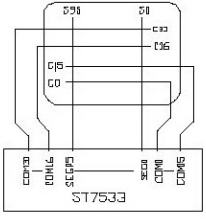

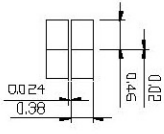

REVISIONS			
—			
△			
△			
△	D		
△			
△			
△	G		
△			
△			
△			
△			
△			
△			
△			

10PIN ASSIGNMENT

1	A
2	K
3	/CS1
4	/RES
5	A0
6	SCL(D6)
7	SI(D7)
8	VDD
9	VSS
10	NC

20PIN ASSIGNMENT

1	/CS1
2	/RES
3	A0
4	SCL(D6)
5	SI(D7)
6	VDD
7	VSS
8	VOUT
9	C3-
10	C1+
11	C1-
12	C2-
13	C2+
14	V1
15	V2
16	V3
17	V4
18	V5
19	VR
20	IRS

Display Type	FSTN/BLUE/NEGATIVE
Display Resolution	DOTS:96*32
Viewing Angle	12:00
Max Ratio and Bias Level	1/33 DUTY, 1/6 BIAS
LCD Controller/Driver	ST7533(COG)
Logic Voltage	3.0V
LCD Driving Voltage	TBD
Operation Temperature	-20 °C TO 70 °C
Storage Temperature	-30 °C TO 80 °C
Backlight Speciality	LED SIDE(WHITE) LED VOLTAGE:3.2 ±0.3V
Remark	DC/DC Booster builtin

TITLE:	Module Speciality
ITEM NO:	M0655
PROJECT NO:	MI9632E-G
DESCRIPTION:	
TOLERANCE UNLESS OTHERWISE SPECIFIED:	X.X±0.2 X.XX±0.1
	THIRD ANGLE PROJECTION

	NAME	SIGN	DATE
DRAWN	Yanxiaolian		04.12.17
CHECKED	Dengyuyuan		
APPROVED	Wangzhaocai		
REV:O	UNIT:mm	SCALE: /	SHEET: 1OF1

MULTI-INNO TECHNOLOGY CO., LTD