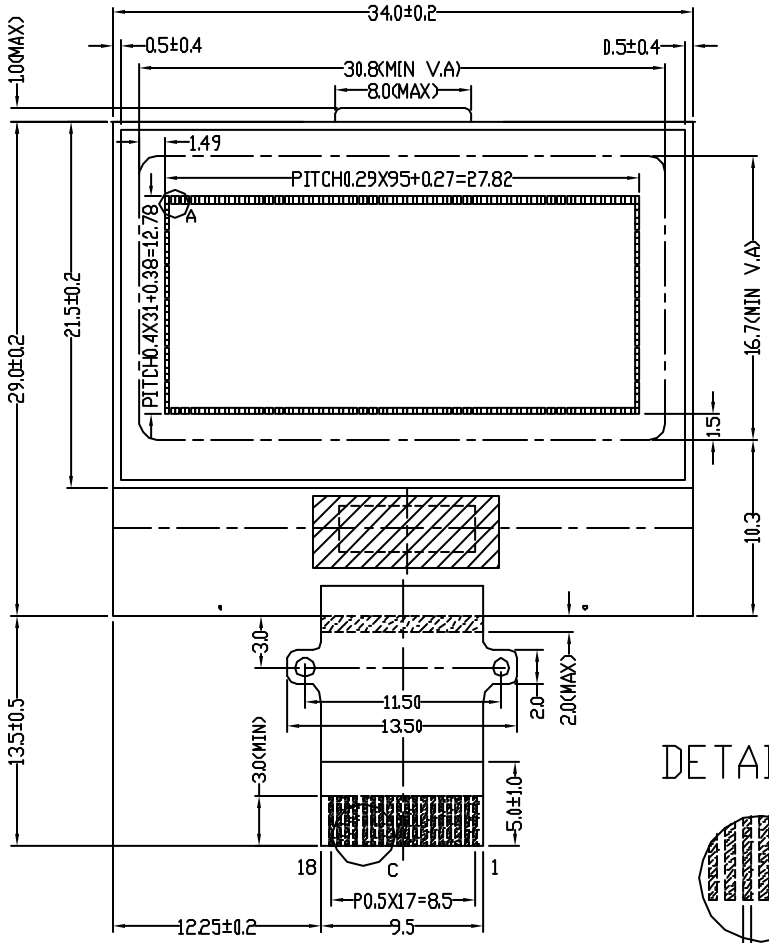

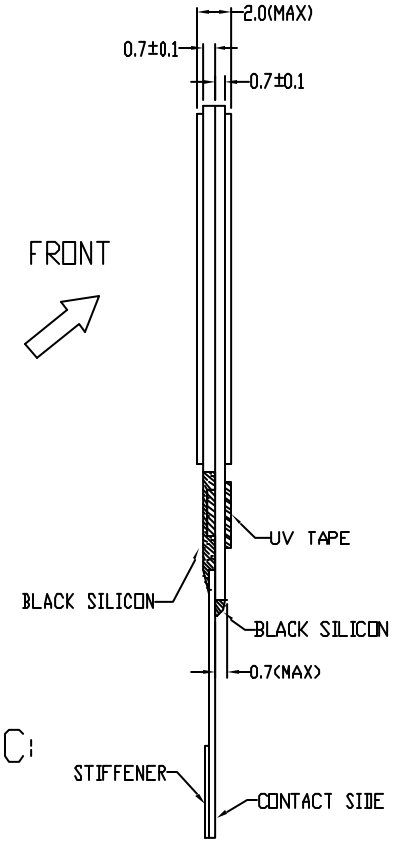

DETAIL A:

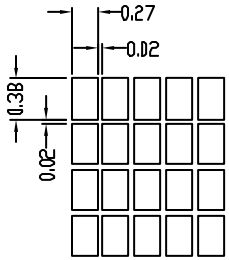

DETAIL C:

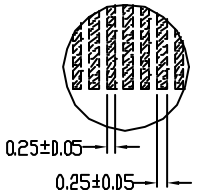

DETAIL B:

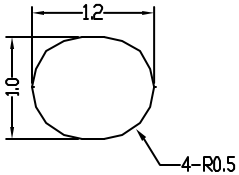

NO.	SYMBOL	NO.	SYMBOL
1	RESETB	10	C1-
2	CS2	11	C2+
3	RS	12	C2-
4	VDD	13	VR
5	SCLK	14	V0
6	SID	15	V1
7	VSS	16	V2
8	VOUT	17	V3
9	C1+	18	V4

NOTES:

1. DISPLAY TYPE: FSTN
2. VIEWING DIRECTION: 6:00
3. POLARIZER MODE: TRANSFLECTIVE/POSITIVE
4. DRIVE METHOD: 1/33 DUTY 1/6 BIAS
5. LCD OPERATING VOLTAGE: 7.5V
6. VDD=2.4~5.5V
7. OPERATING TEMP.: -20°C-+70°C
8. STORAGE TEMP.: -30°C-+80°C
9. CONNECTOR: FPC
10. CONTROLLER: S6B0715A11-B0CZ
11. WITHOUT BACKLIGHT
12. UNMARKED TOLERANCES: ±0.3mm

MULTI-INNO TECHNOLOGY CO.,LTD.

DRAWN BY:	TITLE: MI9632A-G-1		
CHECKED BY:		SCALE	
APPROVED BY:	DWG NO: G-2	UNIT: mm	
CONFIRMED BY:	DWG NAME: MI9632A-G-1	SHEET NO:	OF