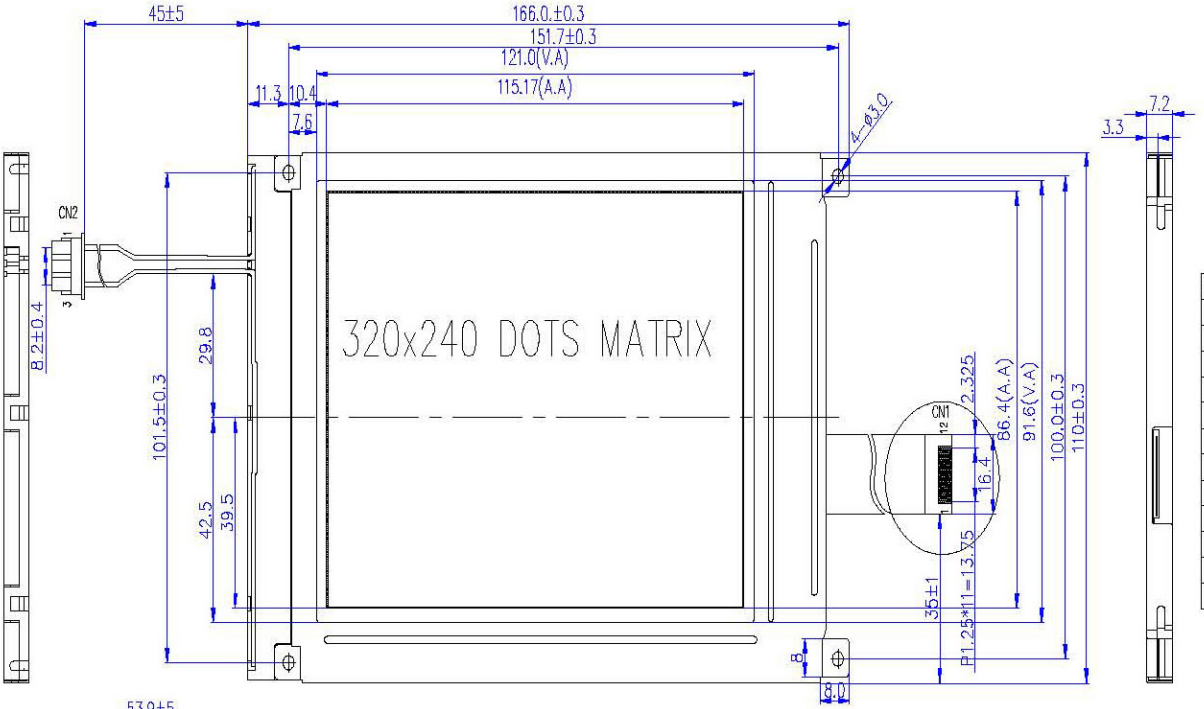

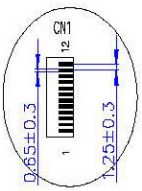

CN1

Pin NO.	Signal
1	S
2	CP1
3	CP2
4	NC
5	DISP OFF
6	D0
7	D1
8	D2
9	D3
10	VDD
11	VSS
12	VLCD

CN2

1	VFL1
2	NC
3	VFL2

NOTES:

1. DISPLAY TYPE : FSTN MODE TRANSFLECTIVE/POSITIVE.
2. DRIVE METHOD:1/240 DUTY,1/16BIAS,VOP=24.0V.
3. VIEWING DIRECTION: 6 O'CLOCK.
4. IC DRIVER: NT7701F3 AND NT7702F4
5. OPERATING TEMP: -20℃ ~ 70℃.
6. STORAGE TEMP: -30℃ ~ 80℃.
7. BACKLIGHT:CCFL,WHITE.
8. MEASURE UP RoHS .
9. UNMARKED TOLERANCE: ±0.2mm.

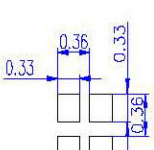

DISPLAY PATTERN