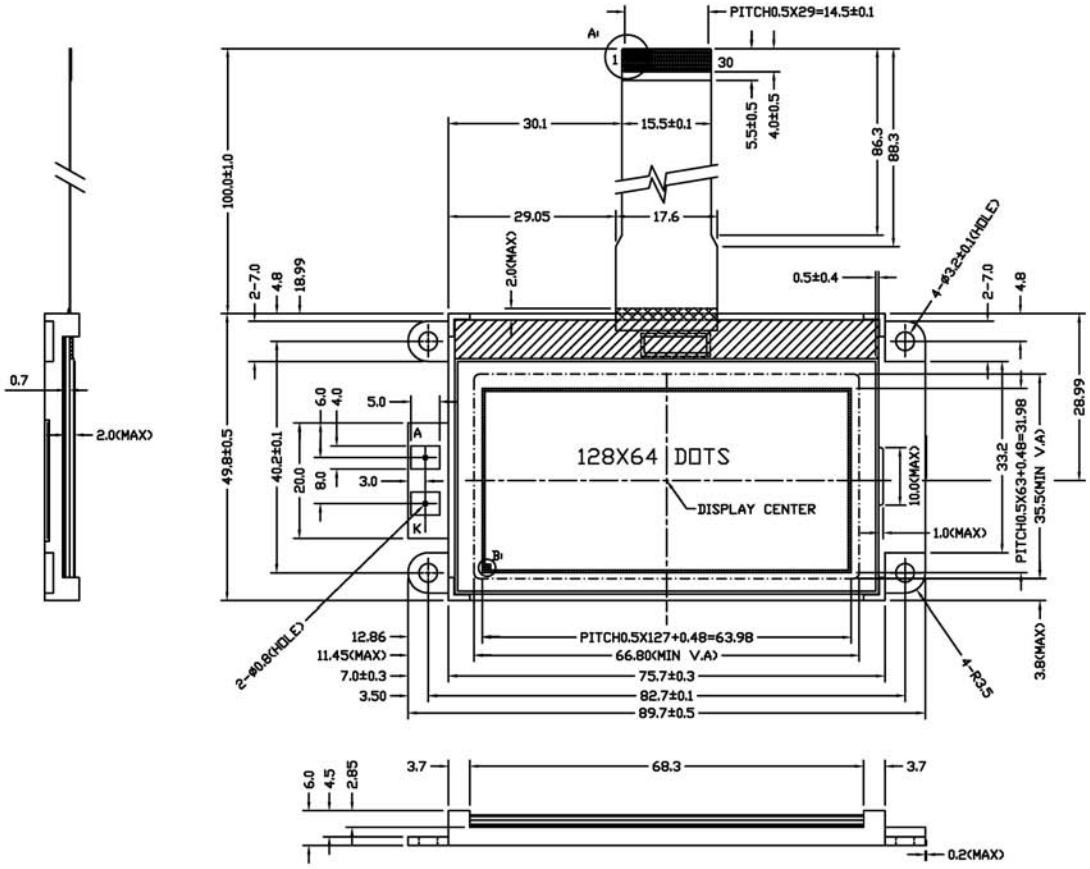

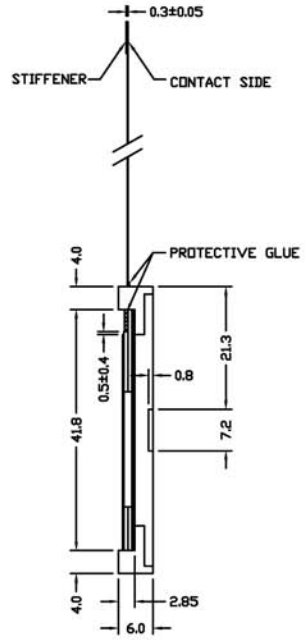

PIN	SYMBOL	PIN	SYMBOL
1	NC	16	VSS
2	$\overline{CS1}$	17	VOUT
3	$\overline{RES}$	18	CAP3-
4	A0	19	CAP1+
5	$\overline{WR}$	20	CAP1-
6	$\overline{RD}$	21	CAP2-
7	D0	22	CAP2+
8	D1	23	V1
9	D2	24	V2
10	D3	25	V3
11	D4	26	V4
12	D5	27	V5
13	D6	28	VR
14	D7	29	C86
15	VDD	30	IRS

DETAIL A:

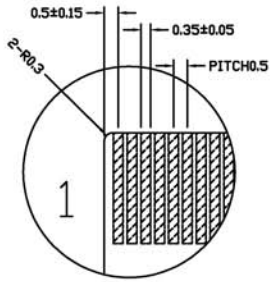

DETAIL B:

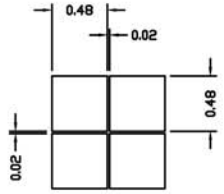

NOTES:

1. DISPLAY TYPE: STN/BLUE MODE
2. VIEWING DIRECTION: 6:00
3. POLARIZER MODE: TRANSMISSIVE/NEGATIVE
4. DRIVE METHOD: 1/65 DUTY 1/7 BIAS
5. LCD OPERATING VOLTAGE: 8.9V
6. VDD: 5.0V
7. OPERATING TEMP.: -20°C-+70°C
8. STORAGE TEMP.: -30°C-+80°C
9. CONTROLLER: S1D15605D11B
10. WITH LED BACKLIGHT(WHITE)
11. CONNECTOR: FPC
12. UNMARKED TOLERANCE: ±0.3mm
13. RoHS

MULTI-INNO TECHNOLOGY CO., LTD

DRAWN BY:	TITLE: MI12864P-G-2		
CHECKED BY:			SCALE:
APPROVED BY:	DWG NO: G-1		UNIT: mm
CONFIRMED BY:	DWG NAME: MI12864P-G-2G-1	SHEET NO: 1 OF 1	