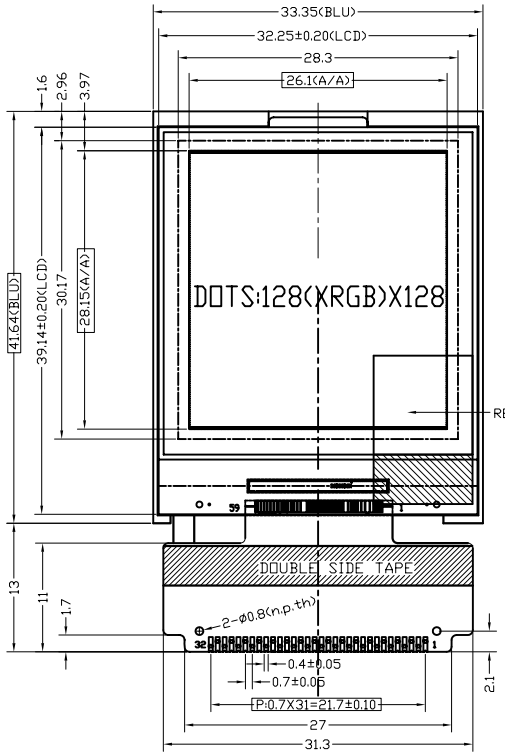

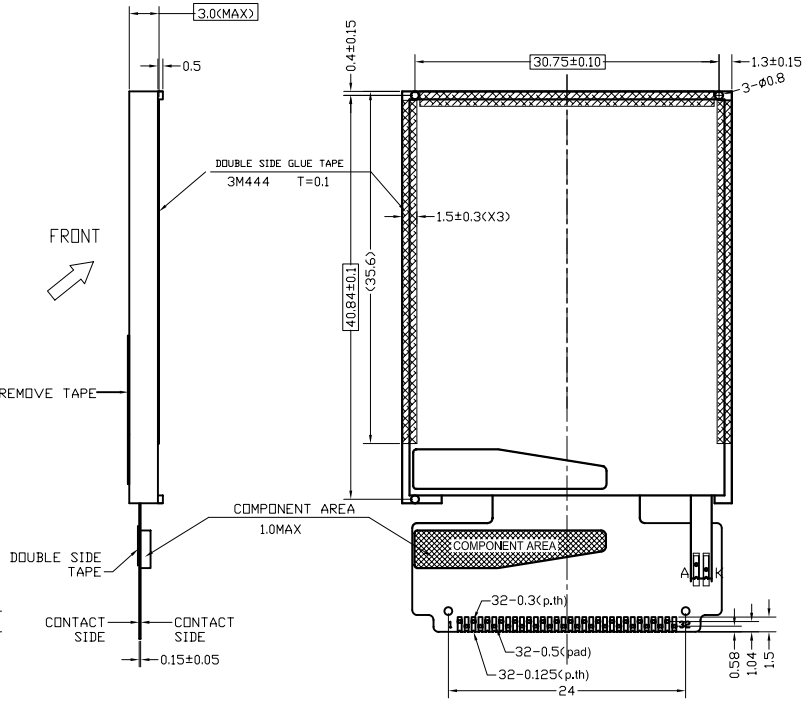

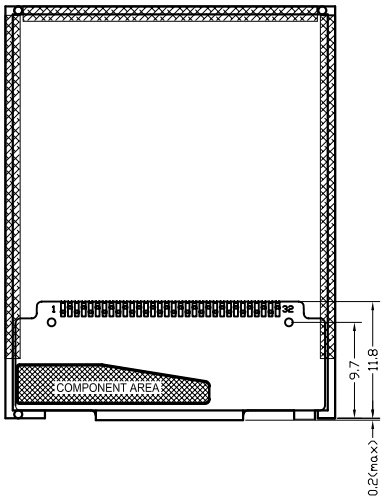

PIN DESCRIPTION

PIN	
1	NC
2	LED+
3	LED-
4	GND
5	VDD
6	VDD
7	OTPD
8	OTPG
9	RESET
10	RS
11	$\overline{WR}$
12	$\overline{RD}$
13	DB0
14	DB1
15	DB2
16	DB3
17	DB4
18	DB5
19	DB6
20	DB7
21	DB8
22	DB9
23	DB10
24	DB11
25	DB12
26	DB13
27	DB14
28	DB15
29	MPU
30	$\overline{CS}$
31	GND
32	NC

DETAIL A(ITO):

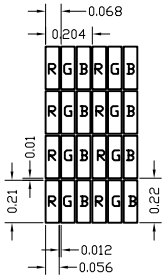

NOTES:

1. DISPLAY TYPE: CSTN(65K COLOR)
2. VIEWING DIRECTION: 6:00
3. POLARIZER MODE: TRANSMISSIVE/NEGATIVE
4. LCD CONTROLLER: S6B33B6
5. DRIVE METHOD: 1/128 DUTY 1/5 BIAS
6. VDD: 3.0V
7. OPERATING VOLTAGE:10.6V
8. BACKLIGHT: 1CHIP-WHITE LED
9. OPERATING TEMP.: -20°C~70°C
10. STORAGE TEMP.: -30°C~80°C
11. UNMARKED TOLERANCE:±0.3
12. [ ] MEANS IMPORTANT DIMENSION

SYMBOL	CONTENT	DATE

MULTI-INNO TECHNOLOGY CO.,LTD

DRAWN BY:	TITLE: M128128NK		
CHECKED BY:			SCALE:
APPROVED BY:	DWG NO: G-1		UNIT: mm
CONFIRMED BY:	DWG NAME: M128128NK G-1	SHEET NO: 1 OF 1	